XENON STROBE & LED POSITION LIGHT 28V
P/N 6480500

MAIN FEATURES - Aviation Strobe/Position Light
CS25 Certified (Dassault Aviation)
Replacement of P/N 701557-2 (HOSKINS)

- ***Reliability***

Led Position Light : 20 000 H
Xenon strobe light : 5 000 H

- ***Low weight***
- ***Resistance to high vibrations***
- ***Tested for extreme environment***

Dassault Aviation EGS / DGT-DTF/SYS/AV 69706

TECHNICAL FEATURES

Position Light: Voltage : 28VDC - DO160D cat Z
Power: 2W
Color: Aviation white

Strobe light: Max operating voltage: 500V
Max rating: 2Hz
Max power : 32 joules
Color: Aviation white

- **Operating Temperature :**

55°C / +70°C

- **Connecting:**

Mode strobe light : AMP Réf. : 1-480-701-0
Pin allocation 1 = + HT
2 = Excit
3 = - HT

Mode Position Light:
2 G22 wires with PIDG 320055 TE Connectivity:
Orange wire:+ 28 V
Blue wire: 0V

- **Altitude :** + 55000 ft
- **Weight :** 95 grs (0.21 lbs)

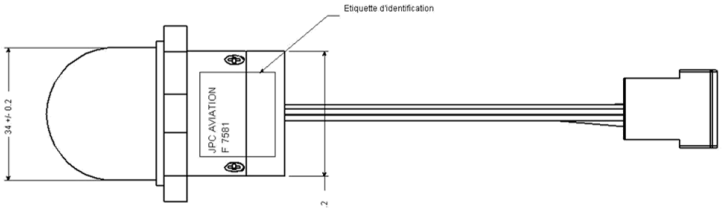

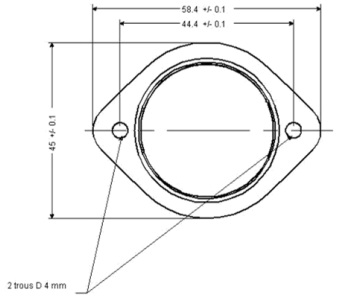

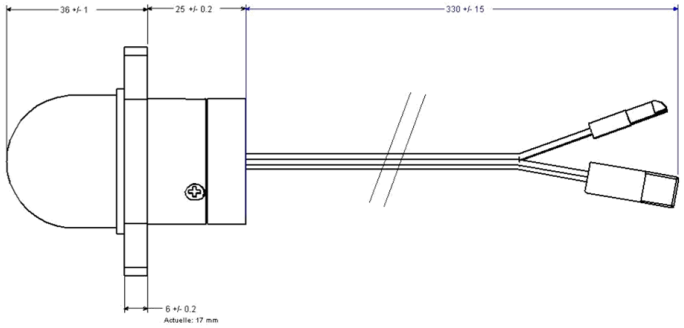

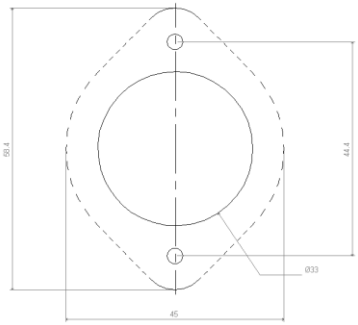

CONTACTS

- ***Phone:*** *+33 (0)380 356 390,*
- ***Email:*** *jpc@jpcaviation.com* - ***Website:*** *www.jpcaviation.com*